Large Integrated Command Post System (LICPS)

Sheltering Warfighters Worldwide
COLLECTIVE PROTECTION DIRECTORATE

Characteristics:

- **2000 sf Complex**
  - 1000 sf. Floor Space Main Hub
  - 30 ft. Wide × 33 ft. Long
  - Utilizes Modified AF Shelter Platform
  - Plus 1000 sf. Wings (4-Frame Tents)
- **Integrated with Tables, Mapboards, Chairs, Lighting, Electrical System**
- **463 L Compatible**
- **Can Link to Six Other Shelters**
- **Links with TEMPER Vestibule Ring**
  - TEMPER Tents
  - Modular GP Tent System
  - SICPS Bootwalls with Interface
- **Estimated cost: $150,000**
- **Includes: CONUS Shipping and Training Team**

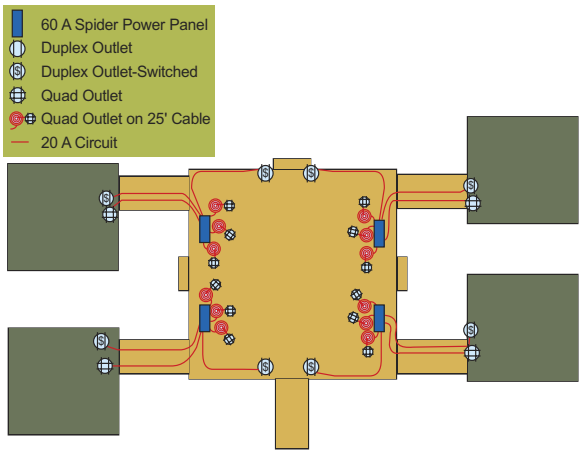

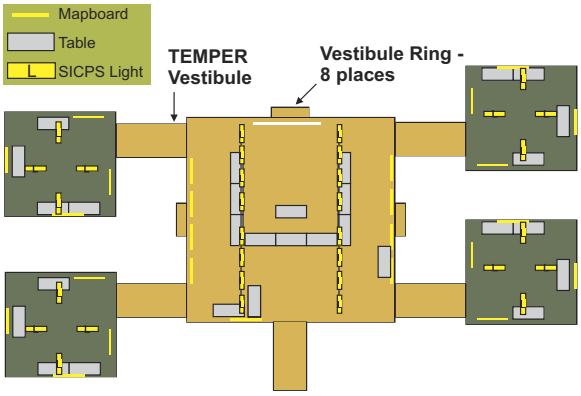

Point of Contact:

Collective Protection Liaison
COMM: (508) 233-4347, DSN: 256-4347
E-MAIL: amssb-rsc-b@natick.army.mil

NATICK SOLDIER CENTER
Kansas St.
Natick, MA
01760
nsc.natick.army.mil

rev 7-15-05
PAO# 05-151